SIMPLIFIED WIRING DIAGRAM

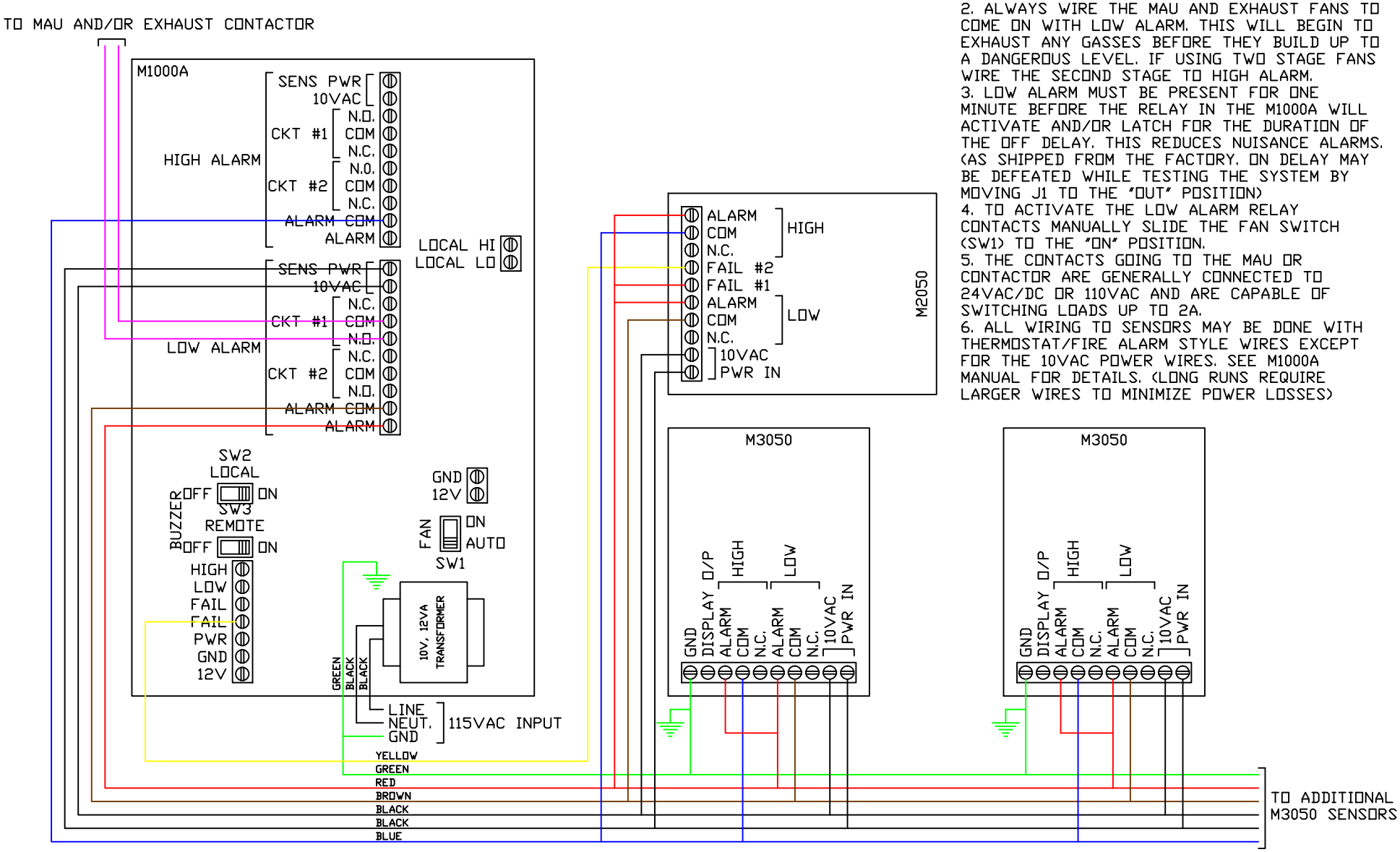

NOTES:

1. ALWAYS CONNECT BOTH HIGH ALARM AND LOW ALARM WIRING FROM THE SENSORS TO THE M1000A. THE HIGH ALARM WIRING WILL ACTIVATE BOTH THE LOW ALARM AND HIGH ALARM CIRCUITS IN THE M1000A WHILE OVERRIDING ANY DELAYS IN THE LOW ALARM CIRCUIT.
2. ALWAYS WIRE THE MAU AND EXHAUST FANS TO COME ON WITH LOW ALARM. THIS WILL BEGIN TO EXHAUST ANY GASSES BEFORE THEY BUILD UP TO A DANGEROUS LEVEL. IF USING TWO STAGE FANS WIRE THE SECOND STAGE TO HIGH ALARM.
3. LOW ALARM MUST BE PRESENT FOR ONE MINUTE BEFORE THE RELAY IN THE M1000A WILL ACTIVATE AND/OR LATCH FOR THE DURATION OF THE OFF DELAY. THIS REDUCES NUISANCE ALARMS. (AS SHIPPED FROM THE FACTORY. ON DELAY MAY BE DEFEATED WHILE TESTING THE SYSTEM BY MOVING J1 TO THE "OUT" POSITION)
4. TO ACTIVATE THE LOW ALARM RELAY CONTACTS MANUALLY SLIDE THE FAN SWITCH (SW1) TO THE "ON" POSITION.
5. THE CONTACTS GOING TO THE MAU OR CONTACTOR ARE GENERALLY CONNECTED TO 24VAC/DC OR 110VAC AND ARE CAPABLE OF SWITCHING LOADS UP TO 2A.
6. ALL WIRING TO SENSORS MAY BE DONE WITH THERMOSTAT/FIRE ALARM STYLE WIRES EXCEPT FOR THE 10VAC POWER WIRES. SEE M1000A MANUAL FOR DETAILS. (LONG RUNS REQUIRE LARGER WIRES TO MINIMIZE POWER LOSSES)